SENTRALISASI
UNIVERSITAS MUHAMMADIYAH SORONG
https://ejournal.um-sorongac.id/index.php/sentralisasi
p-ISSN 1979-7567
e-ISSN 2614-4328

The Effect of Content Marketing and Ewom on Purchase Intention and Brand Image

Haryadi Lisya Martha[1*], Nuryakin[2], Arni[3]

[1, 2, 3] Magister Management, Universitas Muhammadiyah Yogyakarta, Indonesia

*E-mail : *marthadamanta@gmail.com*
Corresponding Author

revised: 04/12/2023 ***published***: 05/01/2024

Abstract*. This study aims to determine the effect of content marketing on e-wom and its impact on purchase intention. The subjects in this study were social media followers on the official accounts of several shoe brands circulating in Indonesia. The sampling technique used purposive sampling by using several criteria. The number of samples in this study was 325. Data were collected using a questionnaire with a Liker scale of 1 to 5 and will be analyzed using the Structural Equation Modeling method. Based on the results of the analysis that has been carried out, it shows that content marketing has a significant positive effect on e-wom, e-wom has a significant positive effect on brand image and purchase intention, and brand image has a significant positive effect on purchase intention, and brand image is able to play a role. as a mediator between e-wom and purchase intention. In conclusion, this study accepts all the hypotheses that have been proposed.*

Keywords*: Content Marketing, E-Wom, Brand Image, Purchase Intention*

Introduction

Today technology development very fast and massive. Consumers who were targeted marketing it is easier in obtaining information. But in the process, consumers would be looking for information and a review relating to certain products before made the purchase. Many ways company to could deliver information to consumers, word of mouth (WOM) is one way applicable to disseminate information, Which in turn could help consumers to make their decisions (Al-Gasawneh & Al-Adamat, 2020). The manufacturing industries specifically to business a shoe many dominated by large brand. Marketing strategies which often used to create brand image through the big event, Now mostly shifted to online media. According to an annual survey conducted by top brand award, Current competition branded shoes in indonesia is still dominated by the top brand adidas with index of 38,6 %, followed brand nike (18,1%), Ardiles (11,1%), Reebok (5,3%), Diadora (5,1%) (https://www.topbrand-award.com/en/2020/06/sepatu-olahraga-fase-2-2020/-diakses 12 Februari 2021).

Top brand index based on result of the research to consumer indonesia, Brand received the *top brand* is pure on consumer choice, The brand is to be elected by the consumer through the survey by looking at the three parameter : top of mind share , top of market share and top of commitment share. To be the brand with the position of index high need to the introduction of the

knowledge of their products to customers first. The introduction of it can be done through some media, as newspapers, television, billboards, radio, and the most effective at the time is social media. Social media is not only a meeting place for humans to socialize in cyberspace, but also a meeting place for consumers and brands. Social media is also the most familiar place for humans at this time. Based on hootsuite's annual report, it is a platform for analyzing and recording social media activity. Currently, the number of active social media users in Indonesia has reached 160 million, representing 272.1 million of the total population of Indonesia, which means that the proportion of active social media users in Indonesia is 59% (https://andi.link/hootsuite-we-are-social-indonesian-digital-report-2020/- diakses 5 Februari 2021).

Social media is currently one of the most frequently used marketing channels to increase customer engagement. This proves that people are very close to social media in their daily lives. According to Yoong & Lian (2019), creating customer interactions on social media will have a major impact on customers' desire to buy products. Customers will always be active on social media, customers will also always see what they like and learn what they want through social media. On social media, there are content feeds which are usually published by personal and business accounts. Big brands doing business today are also following the trend to operate on social media. Interesting content will create conversation topics for customers through the comments column or on the website. Marketing carried out on social media with content-based will encourage consumers to participate in the dissemination of content through ewom, which means that the use of content for marketing has a positive impact on ewom (Al-Gasawneh & Al-Adamat, 2020).

The content discussed on the internet will definitely affect eWOM and will affect many things, such as the brand image of the product being discussed. In online promotion tools, if a brand, product or item becomes a topic of word of mouth, the distribution of its success rate over the business cycle refers to the level of customer satisfaction (Kotler & Keller, 2009). Quoting the statement of Farzin & Fattahi (2018) which says that a positive internet review will increase customer confidence that the brand has a good image in the minds of other customers, which means that in this case e-wom is able to affect the brand image of a product on the internet. Esch et al. (2006) In their study, they found that current purchases are directly driven by brand image. which means, when a good brand image is formed on the Internet, it will have an impact on the customer's desire to buy products from that brand.

Positive E-wom is a distinct advantage for a brand. One of the most effective forms of ewom communication is product reviews published by consumers on the Internet (Sen & Lerman, 2007), Because consumers often look for product reviews online and reviews from their peers when they collect information about products before buying (Jalilvand & Samiei, 2012). Positive e-WOM not only affects the brand image, but also motivates customers to consider buying the

product. Al-Gasawneh & Al-Adamat (2020) found that e-wom has a significant positive effect on purchase intention, comments and reviews both that customers see on websites and social media have a positive impact on their desire to buy an item. Different industries explain that companies that use online ordering systems should pay more attention to the credibility of ewom, because according to (Ahmad et al., 2020), e-wom plays a big role in one's interest in choosing an online airline.

The structure and process of a content can influence consumer thinking to be more confident that buying a product can go through the stages of e-WOM and a good brand image first. Previous research has not involved brand image in a research model that involves content marketing, as well as brand image research on purchase intention which still does not involve content marketing in a research model. This process will be the focus of researchers in this study. Researchers developed research belonging to Al-Gasawneh & Al-Adamat (2020) which focused on discussing the influence of content marketing on e-wom and purchase intention, as well as research conducted by Farzin & Fattahi (2018) which focuses on discussing the role of brand image in mediating e-wom and purchase intent, researchers will create a unified research model with the support of the two reference studies that are adapted to the object in this study.

Research Methods

Research Design

The subjects of this research are shoe consumers who are followers of social media on the official Instagram account of Indonesian shoe brands. The subject of this research is the brand of shoes available for sale in Indonesia. In this study, the main data came from questionnaires which were distributed directly to the respondents.

Sample and Data Collection

Determination of the sample using purposive sampling technique. With the following criteria 1) Have you seen feed/story content published by the official Instagram account of a well-known shoe brand (Adidas, Nike, Vans, Reebok, Diadora, New Balance, etc.); 2) currently domiciled in the Special Region of Yogyakarta; 3) Be more than 15 years old. The data collection technique in this study was carried out using the distribution of questionnaires. The questionnaire contains statement items as a description of the variable indicators.

Construct Measurement

To measure the score of each statement, the researcher used a Likert scale developed by Ransis Likert. This study uses multiple statements, with a level of 1 (strongly disagree), 2 (disagree), 3 (neutral), 4 (agree), and 5 (strongly agree).

Analysis and Hypothesis Test Technique

Direct hypothesis testing was carried out using the Structural Equation Modeling (SEM) approach using AMOS while for the mediation hypothesis using the Sobel test. Structural Equation Modeling (SEM) is a set of statistical techniques that allow the simultaneous testing of a relatively complex set of relationships. So researchers use this analytical tool because of the complex relationships of several variables tested in this study. In addition, the Structural Equation Modeling (SEM) approach using AMOS is able to combine several techniques that include factor analysis, path analysis and regression analysis. (content marketing and e-wom), dependent variable (purchase intention), mediating variable (brand image).

Dependent Variable

The dependent variable in the construct built in this study is purchase intention. According to Kudeshia Kumar (2017) and Rahman (2020), purchase intention is the customer's desire to buy products and plan purchases for now and in the future, measurement of purchase intention can use indicators 1) Would buy the product, 2) Would buy the product rather than other, 3) Plan purchase now, 4) Plan purchase in the future.

Independent Variable

Content marketing is the independent variable in this study, which is content that is regularly published on social media by a brand, whether it be in the form of feed content or stories. Content marketing is built by constructs 1) Relevance, 2) Informative, 3) Reliability, 4) Value, 5) Uniqueness, 6) Emotions, 7) Intelligence.

Hypothesis Development

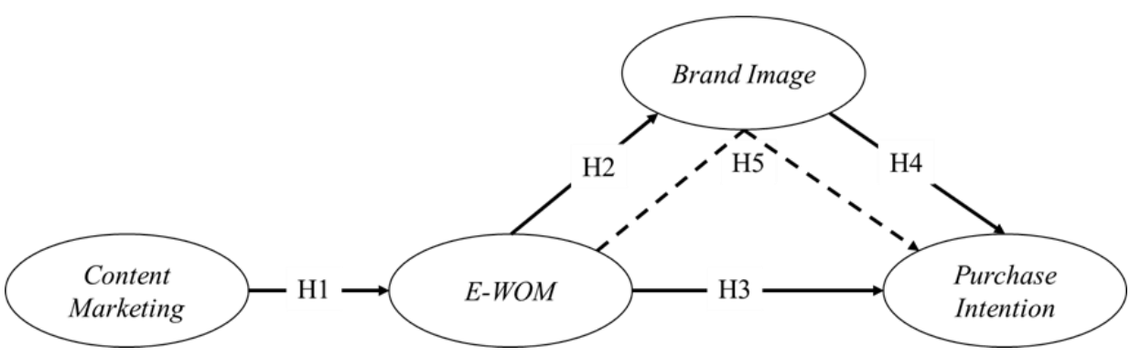

Figure 1. Research Model

Mediation Variable

Brand image is a mediating variable in this study. According to Fianto et al. (2014), brand image is something attached to a brand, which should be a positive support for customers to choose

the brand. The indicators that can measure brand image are saliancy, reputation, familiarity and trustworthy.

Results and Discussion

Descriptive Statistics and Correlation

Table 1 shows statistical descriptions and correlations between study variables. Table 1 also shows the mean, standard deviation, and correlation values to support the testing of hypotheses 1 to 4. Statistical testing in this study did not show any sign of multicollinearity in testing the research model. The results of the calculation of the average value, standard deviation, and correlation show that there is a positive relationship between content marketing, word of mouth, brand image and purchase intention.

Table 1. Mean, Standard Deviation and Correlation of the Construct

Construct	Mean	SD	1	2	3	4
Content Marketing	3.60	0.655	1.000			
E-WOM	3.46	0.684	0.349**	1.000		
Brand Image	3.46	0.702	0.320**	0.194**	1.000	
Purchase Intention	3.43	0.705	0.390**	0.405**	0.250**	1.000

*p < 0.05, **p<0.01

Respondent Characteristics

Summarizing the results of the completed questionnaire can explain the characteristics of the respondents. In this study, the characteristics of the respondents were based on gender, age, occupation and income. From the gender of male respondents as many as 228 people with a percentage of 70.2% and women as many as 97 people with a percentage of 29.8%. The majority of the age is 15-25 years as many as 80 people with a percentage of 24.6%. The majority of professions are private employees as many as 116 people with a percentage of 35.7%. And the majority of income is IDR 150,000 - IDR 2,500,000 with a percentage of 35.1%.

Table 2. Respondent Characteristics

	Frequency	Percentage
Gender		
Male	228	70,2%
Female	97	29,8%
Age		

<= 20 y.o	60	18.5%
15 s/d 25 y.o	80	24.6%
26 s/d 30 y.o	91	28%
31 s/d 35 y.o	68	20,9%
>40 y.o	6	1.8%
Ocupation		
Private Company	116	35,7%
Student	111	34,2%
Civil Servant	21	6.5%
Entrepreneur	65	20%
Others	12	3.7%
Income		
Rp500.000 s/d Rp1.500.000	62	19,1%
Rp1.500.001 s/d 2.500.000	114	35,1%
Rp2.500.001 s/d 3.500.000	53	16,3%
Rp3.500.001 s/d 4.500.000	63	19,4%
> Rp4.500.000	33	10,2%

Source: primary data

Valditiy and Reliability Test

Based on Confirmatory Factor Analysis, researchers tested the validity and reliability of the indicators in the full SEM model. The provisions are valid for an indicator and can still be tolerated if the loading factor is at a value of 0.50 or 0.60 (Ghozali, 2014). Reliability test on this model to measure and reflect the construct, thereby providing a consistent measurement of each item in the instrument. Items are consistently measured using Construct Reliability (CR), with the provisions of CR 0.7 (Ghozali, 2011).

Testing the instrument using a validity test. There are 19 indicators with a loading factor value above 0.60. This indicates that all indicators are feasible to use. In addition, reliability testing shows that all variables are reliable because they have met the CR criteria. The results of these tests can be seen in the table below.

SENTRALISASI
UNIVERSITAS MUHAMMADIYAH SORONG
https://ejournal.um-sorongac.id/index.php/sentralisasi
p-ISSN 1979-7567
e-ISSN 2614-4328

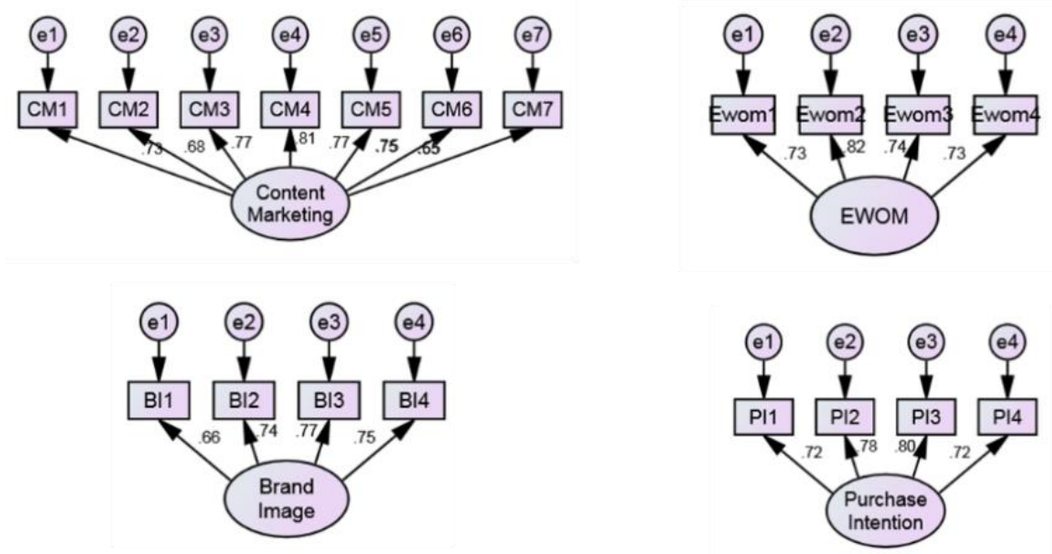

Figure 2. Confirmatory Factor Analysis Test

Table 3. Confirmatory Factor Analysis and Consruct Reliability

Variables & Indicators	Loading Factor
Content Marketing (Construct reliability= 0,919, AVE= 0,711)	
Relevant	0,735
Informative	0,683
Reliability	0,770
Value	0,813
Uniqueness	0,773
Emotions	0,754
Intelligence	0,653
E-WOM (Construct reliability= 0,884, AVE= 0,720)	
Written positive comment	0,729
Posted positive review	0,823
Upload photo & video	0,735
Become fan	0,726
Brand Image (Construct reliability= 0,857, AVE= 0,714)	
Saliancy	0,662
Reputation	0,738
Familiarity	0,773
Trustworthy	0,751
Purchase Intention (Construct reliability= 0,878, AVE= 0,722)	

SENTRALISASI
UNIVERSITAS MUHAMMADIYAH SORONG
https://ejournal.um-sorongac.id/index.php/sentralisasi
p-ISSN 1979-7567
e-ISSN 2614-4328

would buy the product	0,724
the product rather than other	0,776
plan purchase now	0,799
plan purchase in the future	0,717

Source: primary data

Hypothesis Test

Empirical testing of the model in Figure 2 uses Structural Equation Modeling. The model indicates Chi-square = 144.698 with probability value = 0.088 at GFI = 0.956, AGFI = 0.953 and TLI = 0.989, while the value at CFI = 0.992 and RMSEA = 0.023. The results on the model can be said to be fit. Based on statistical analysis, the results of this research model have met the standard criteria that have been determined. The average value, matrix correlation between the constructs of content marketing, e-wom, brand image and purchase intention is presented in Table 3.

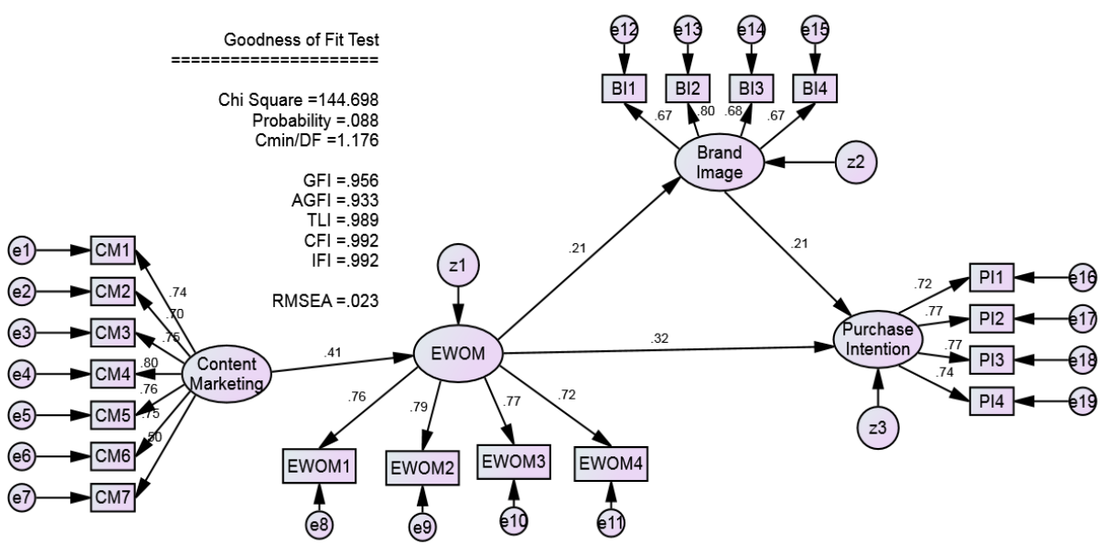

Figure 3. Full Model SEM

Table 4. Hypothesis Test

Regression Weighs	Path Cefficient	Sig.
Content Marketing → EWOM	5,357	0,000
EWOM → Brand Image	3,103	0,002
EWOM → Purchase Intention	4,347	0,000
Brand Image → Purchase Intention	3,091	0,002

Regression Weighs	Sobel Stat.	2 tailed prob.
E-WOM → Brand Image → Purchase Intention	2,195	0,028

Source: primary data

Based on table 4, it is known that the P value between content marketing on e-wom is 0.000 and the C R value is 5.357, based on these data, the first hypothesis is supported, meaning that in this study content marketing has a significant influence on e-wom. It is known that the P value between e-wom on brand image is 0.002 and the CR value is 3.103, based on these data, the second hypothesis is supported, meaning that in this study e-wom has a significant influence on brand image. it is known that the P value between e-wom on purchase intention is 0.000 and the CR value is 4.347, based on these data, the third hypothesis is supported, meaning that in this study e-wom has a significant influence on purchase intention. The P value between brand image and purchase intention is 0.002 and the CR value is 3.091, based on these data, the fourth hypothesis is accepted, meaning that in this study brand image has a significant influence on purchase intention. There is a two-tailed probability value in the Sobel test of 0.028, based on these data, the fifth hypothesis is supported, meaning that in this study brand image acts as a mediator between e-wom and purchase intention.

Discussion

The framework is explained in the context of full model analysis through regression weights. There are 5 hypotheses developed where all hypotheses produce p-values less than 0.05 (CR > 1.96). That is, content marketing is able to have a significant effect on e-wom, e-wom is able to have a significant effect on brand image and purchase intention, brand image can have a significant effect on purchase intention and the mediation relationship of brand image also plays a significant role. The marketing planning process model developed by Rupik & Zymninkowski (2014) states that marketing planning begins by observing the dimensions of consumer behavior including creating perceptions from a consumer which will then lead to motivation. In the digital sphere, creating consumer perceptions can be through the creation of relevant content, the creation of relevant content will trigger the perception of followers, if they find the content interesting they will be motivated to talk about it and even intend to buy it or vice versa.

This study empirically proves that all tested hypotheses are significant. This shows that empirically the studies conducted by previous researchers support the results of this study. Content marketing according to Chaffey & Ellis-Chadwick (2019) is the management of content in the form of text, audio, multimedia and video where the goal is to involve customers and prospects in meeting business goals published through print and digital media, including web and mobile

platforms intended by various forms of web presence such as posting pages, website blog pages, social media and comparison pages. In the context of shoe brands, content is also very important to continue to be developed, because shoes are goods that have a long service life, so some people tend to be selective in determining which shoes they will buy. In this condition the role of content becomes very important to provide education or even provide persuasion to consumers. Therefore, according to Pažėraitė & Repovienė (2016) quality content must contain 7 elements, namely relevance, informative, reliability, value, uniqueness, emotions and intelligence. The virtual world, whose users are commonly referred to as netizens, is very easy to give certain stimuli so that something becomes hotly discussed. Netizens are very sensitive to various types of content published in cyberspace. This condition is an advantage for companies if they are able to take advantage of content marketing to create warm conversations in the virtual world, which is commonly referred to as electronic word of mouth. positive for the brand. In this study, the average value of the respondents' responses was good, it's just that the most prominent indicator among the others was intelligence. This means that the brands included in this research have been able to be read by humans well, besides that they can also be processed by search engines properly, so the good impact is that there are more positive comments discussing the brand.

Meanwhile, the e-WOM message is an important message for consumers when they want to get information about the quality of a product or service, and the message is used as an important reference in the process of making purchasing decisions (Chevalier & Mayzlin, 2003). A positive EWOM is able to create a good image for a brand, logically a warm conversation in cyberspace will make other people who have just joined curious about the content of the conversation, if the conversation is something positive then people will get a positive perception of the conversation the. The company will greatly benefit from the positive conversation, thus the brand will also be affected by the positive, namely a positive image for the brand and the company. In this study, the indicators used to form the e-wom construct are making positive comments, giving positive reviews, uploading photos and videos of the brand and becoming a fan of the brand. Of the 4 indicators that were built, in general, they showed a good response from the respondents. Kotler & Armstrong (2018), revealed that brand image is something that is owned by someone in the form of a set of ideas, beliefs and impressions of a brand, therefore brand image has a determination towards consumer attitudes and actions. A strong brand must have a strong brand image. They also mention that brand image is a reflection of an objective reality or not a strong belief about a particular brand. The image formed from this association is the basis for buying decisions and even brand loyalty from consumers.

Brand image becomes a very important variable in creating purchase intention. Because the image attached to a brand will be a reference for a consumer to determine whether the brand is trusted and has credibility or not. By having a positive image, consumers will assume that the

products sold by the brand are trusted products even though consumers have never tried or used them. Therefore, the better the image owned by a brand, the more someone's intention to buy the brand will be. Meanwhile, according to the marketing planning process model developed by Rupik (2014) states that marketing planning begins by observing the dimensions of consumer behavior including creating perceptions from a consumer which will then lead to motivation. A strong brand image is one of the external motivations that will provide a stimulus to the minds of consumers so that consumers think and consider a brand to buy or not. Therefore, increasing saliancy, reputation, familiarity and trustworthy in a brand is a very important combination to be considered by the company so that the brand image is stronger in the minds of consumers.

Keller (2003) explains that a good brand image is created through marketing programs that are strongly connected, profitable and have unique associations with the brand in memory, in the long term the perception of the image is relatively consistent. An image that is consistently considered strong can act as a link between e-wom and purchase intention. Because, if the company only relies on e-wom in its marketing strategy, it is feared that the e-wom that appears does not involve the image of a brand and will be easily forgotten by consumers. However, if the brand image is involved, the perceptions that have emerged and have been formed will be long gone, even consistently embedded in the minds of consumers. Therefore, the role of brand image is very important to be appointed so that in the long term consumers still have a high intention to buy the brand in question (which has a good image).

Implication

The findings in this study provide managerial implications that can be followed up as a policy. The managerial implication in this research is to improve the quality of content through various digital marketing channels from a brand. Quality content can be seen from the indicators used in this study such as relevant, informative, reliability, value, uniqueness, emotions, and intelligence. For example, there are many cases where brands only focus on information related to the products they sell, without paying attention to the relevance of their audience, this relevance can be based on follower demographics or follower behavior, brands can adjust or create their own official social media accounts to serve content on their website. certain demographics.

The next implication, is to increase the talk on social media, this method is also a powerful strategy to improve the image of a brand. Brands can formulate several strategic plans that can provoke people to talk about their brand in cyberspace. For example, collaborating with public figures who are being followed by the market. Of course, the selection must adjust the target consumer according to the brand. As was done by one fast food brand, they collaborated with a band from Korea which is currently being loved by Indonesian youth, the result was that the

strategy was successful and was able to increase the discussion of the digital world which consequently increased the purchase and brand image.

Finally, to create a good brand image, brands need to pay attention to several elements including saliancy, reputation, familiarity and trustworthy. Brands need to pay attention to these elements. For example, a brand needs to improve its reputation, reputation enhancement can be done by creating positive conversations in digital media. There is nothing wrong with brands formulating viral marketing strategies to increase the attractiveness of people's positive comments in the digital world. Another way that can be done is by utilizing User Generated Content (UGC), where the brand publishes content that contains customer satisfaction with the use of products from the brand. Thus, the brand reputation will increase which will positively impact someone's intention to buy products from the brand.

Conclusions

In this study, it is known that content marketing and e-wom are proven to be influential variables in forming a positive brand image and purchase intention. The current digital era needs to be seriously considered by brands to develop their content as well as possible, because based on the findings in this study, the first step to generate purchase intention is to create good and relevant content for the target market. There are still many things that are far from ideal in this study, things that need to be disclosed regarding the limitations of the study, namely, not specifically examining users with certain characters, for example specifically for women or special characters aged 17-25 years, the number of samples from each -Each brand studied is not the same because of the difference in the number of respondents and followers of the brand, and this study does not explain how big the role of e-wom is as a mediator between content marketing on brand image and purchase intention.

Suggestion

The practical advice from the study that has been carried out is that it is known that there are two variables that influence purchase intention, namely e-wom and brand image. Based on the research findings, the mediation relationship of brand image shows significant results, although the results of the mediation hypothesis are significant, the direct effect of brand image on purchase intention is still less large than the effect of e-wom on purchase intention. Thus, researchers suggest the need for efforts to improve the image of the shoe brands in this study, these efforts can refer to indicators such as increasing reputation and trust, efforts to increase reputation can be started by creating content that is useful for consumers, companies can also publish achievement of the brand in terms of market share and standardized production quality, thus customers are increasingly confident in the brand and have an interest in buying products from that brand.

References

Aberdeen, N. I., Syamsun, M., & Najib, M. (2016). The Effect of Brand Awareness and Image on Consumer Perceived Quality and Purchase Intension – A Study Case of Carbonated Drink Brand at Bogor City. *International Journal of Scientific and Research Publications*, *6*(8), 441–446. www.ijsrp.org

Ahmad, A. M. K., Abuhashesh, M., Obeidat, Z., & AlKhatib, M. J. (2020). E-WOM and airline e-ticket purchasing intention: Mediating effect of online passenger trust. *Management Science Letters*, *10*(12), 2729–2740. https://doi.org/10.5267/j.msl.2020.4.037

Akram, U., Hui, P., & Sohaib, M. (2018). Impact of eWOM and risk-taking in gender on purchase intentions: evidence from Chinese social media. *International Journal of Information Systems and Change Management*, *10*(2), 101. https://doi.org/10.1504/ijiscm.2018.10015819

Al-Debei, M. M., & Al-Lozi, E. (2014). Explaining and predicting the adoption intention of mobile data services: A value-based approach. *Computers in Human Behavior*, *35*, 326–338. https://doi.org/10.1016/j.chb.2014.03.011

Al-Gasawneh, J. A., & Al-Adamat, A. M. (2020). The mediating role of e-word of mouth on the relationship between content marketing and green purchase intention. *Management Science Letters*, *10*(8), 1701–1708. https://doi.org/10.5267/j.msl.2020.1.010

Anjuman, M. (2020). *Does social media advertising enhance consumers ' purchase intention ? December*, 388–395.

Assael, H. (1998). *Consumer Behavior and Marketing Action* (6th ed.). South Western College Publishing.

Bilgin, Y. (2018). *Business & management studies: an international journal*. *1*, 128–148.

Chaffey, D., & Ellis-Chadwick, F. (2019). *Digital Marketing: Strategy, Implementation and practice (7th ed.)*. Pearson.

Cham, T. H., Lim, Y. M., Sia, B. C., Cheah, J. H., & Ting, H. (2020). Medical Tourism Destination Image and its Relationship with the Intention to Revisit: A Study of Chinese Medical Tourists in Malaysia. *Journal of China Tourism Research*, *00*(00), 1–29. https://doi.org/10.1080/19388160.2020.1734514

Chan, A., & Astari, D. (2017). The Analysis of Content Marketing in Online Fashion Shops in Indonesia. *Review of Integrative Business and Economics Research*, *6*(2), 233. http://buscompress.com/journal-home.html

Chevalier, J. a, & Mayzlin, D. (2003). the Effect of Word of Mouth on Sales : *National Bureau of Economic Research*, 40.

Farzin, M., & Fattahi, M. (2018). eWOM through social networking sites and impact on purchase intention and brand image in Iran. *Journal of Advances in Management Research*, *15*(2),

161–183. https://doi.org/10.1108/JAMR-05-2017-0062

Ferdinand, A. (2014). *Metode Penelitian Manajemen Pedoman Penelitian untuk Penulisan Skripsi, Tesis dan Disertasi Ilmu Manajemen*. Badan Penerbit Universitas Diponegoro.

Fianto, A. Y., Hadiwidjojo, D., Aisjah, S., & Solimun, S. (2014). The Influence of Brand Image on Purchase Behaviour Through Brand Trust. *Business Management and Strategy*, *5*(2), 58. https://doi.org/10.5296/bms.v5i2.6003

Ghozali, I. (2014). *Model Persamaan Struktural Konsep dan Aplikasi dengan Program AMOS 22*. Badan Penerbit Universitas Diponegoro.

Hawkins, D. I. 20351, & Mothersbaugh, D. L. 20355. (2010). *Consumer behavior : building marketing strategy / Del I. Hawkins, David L. Mothersbaugh.* http://dspace.fue.edu.eg/xmlui/handle/123456789/4317

Hennig-Thurau, T., Gwinner, K. P., Walsh, G., & Gremler, D. D. (2004). Electronic word-of-mouth via consumer-opinion platforms: What motivates consumers to articulate themselves on the Internet? *Journal of Interactive Marketing*, *18*(1), 38–52. https://doi.org/10.1002/dir.10073

Husein Lubis, M. R., Nuryakin, N., & Susanto, S. (2018). *Understanding Customer Purchase Intention of IT Product on Indonesia Manda Rahmad Husein Lubis*. *7*(December), 109–122. https://doi.org/10.21776/ub.apmba.2018.007.02.4

Isyanto, P., Sapitri, R. G., & Sinaga, O. (2020). Micro influencers marketing and brand image to purchase intention of cosmetic products focallure. *Systematic Reviews in Pharmacy*, *11*(1), 601–605. https://doi.org/10.5530/srp.2020.1.75

Jalilvand, M. R., & Samiei, N. (2012). The effect of electronic word of mouth on brand image and purchase intention: An empirical study in the automobile industry in Iran. *Marketing Intelligence and Planning*, *30*(4), 460–476. https://doi.org/10.1108/02634501211231946

Keller, K. L. (2003). *Strategic Brand Management : Building, Measuring, and Managing Brand Equity*. Pearson Education.

Kim, J., Melton, R., Min, J. E., & Kim, B. Y. (2019). Who says what?: exploring the impacts of content type and blog type on brand credibility, brand similarity and eWOM intention. *Eurasian Journal of Business and Economics*, *12*(23), 17–43. https://doi.org/10.17015/ejbe.2019.023.02

Kotler, P., & Armstrong, G. (2018). *). Principles of Marketing, Seventeenth Edition* (Seventh). Pearson.

Kotler, P., & Keller, K. L. (2009). *Manajemen Pemasaran* (13th ed.). Penerbit Erlangga.

Kudeshia, C., & Kumar, A. (2017). Social eWOM: does it affect the brand attitude and purchase intention of brands? *Management Research Review*, *40*(3), 310–330. https://doi.org/10.1108/MRR-07-2015-0161

Manorek, S. L., Pangemanan, S. S., & Rumokoy, F. (n.d.). *ISSN 2303-1174 S.L. Manorek., S.S. Pangemanan., F. Rumokoy*. *3*(4), 593–601.

Mao, Y., Lai, Y., Luo, Y., Liu, S., Du, Y., Zhou, J., Ma, J., Bonaiuto, F., & Bonaiuto, M. (2020). Apple or Huawei: Understanding flow, brand image, brand identity, brand personality and purchase intention of smartphone. *Sustainability (Switzerland)*, *12*(8), 1–22. https://doi.org/10.3390/SU12083391

PAŽĖRAITĖ, A., & REPOVIENĖ, R. (2016). *Content marketing elements and their influence on search advertisement effectiveness : theoretical background and practical insights*. *1142*.

Rahman, A. (2020). Brand Image, eWOM, Trust and Online Purchase Intention of Digital Products among Malaysian Consumers. *Journal of Xi'an University of Architecture & Technology*, *XII*(III), 4935–4946. https://doi.org/10.37896/jxat12.03/452

Rangkuti, F. (2004). *The Power of Brand.* PT. Gramedia Pustaka Utama.

Rupik, K. (2014). Analytical and Behavioural Elements of Marketing Planning Model – Empirical Evidence from Polish Firms. *International Journal of Economic Practices and Theories*, *4*(5), 668–676.

Rusmardiana, A., Supriadi, F., Irviani, R., Mukhlis, H., & Chauhan, R. (2020). The role of sales promotion girl on purchase intention. *European Journal of Molecular and Clinical Medicine*, *7*(2), 1311–1325.

Sanny, L., Arina, A. N., Maulidya, R. T., & Pertiwi, R. P. (2020). Purchase intention on Indonesia male's skin care by social media marketing effect towards brand image and brand trust. *Management Science Letters*, *10*, 2139–2146. https://doi.org/10.5267/j.msl.2020.3.023

Sarwono, Y. (2010). Pengertian Dasar Structural Equation Modeling (SEM). *Jurnal Ilmiah Manajemen Bisnis Ukrida*, *10*(3), 98528.

Schiffman, L. G., & Kanuk, L. L. (2007). *Perilaku Konsumen*. PT. Indeks.

Sekaran, U., & Bougie, R. (2013). *Research methods for business*. John Wiley & SOna Ltd.

Sen, S., & Lerman, D. (2007). Why Are You Telling Me This? An Examination Into Negative Consumer Reviews On The Web. *Journal of Interactive Marketing*, *21*(3), 2–20. https://doi.org/10.1002/dir

Seo, E., & Park, J. (2018). Journal of Air Transport Management A study on the e ff ects of social media marketing activities on brand equity and customer response in the airline industry. *Journal of Air Transport Management*, *66*(August 2017), 36–41. https://doi.org/10.1016/j.jairtraman.2017.09.014

Serra-Cantallops, A., Ramon-Cardona, J., & Salvi, F. (2018). The impact of positive emotional experiences on eWOM generation and loyalty. *Spanish Journal of Marketing - ESIC*, *22*(2), 142–162. https://doi.org/10.1108/SJME-03-2018-0009

Simamora, B. (2002). *Panduan Riset Perilaku Konsumen*. Pustaka Utama.

Simonian, M., Forsythe, S., Suk Kwon, W., & Chattaraman, V. (2012). The role of product brand image and online store image on perceived risks and online purchase intentions for apparel. *Journal of Retailing and Consumer Services*, *19*(3), 325–331. https://doi.org/10.1016/j.jretconser.2012.03.006

Tariq, M., Abbas, T., Abrar, M., & Iqbal, A. (2017). EWOM and brand awareness impact on consumer purchase intention: mediating role of brand image. *Pakistan Administrative Review*, *1*(1), 84–102.

Wilson, J. R. (1991). *Word of Mouth Marketing.* Wiley & SOns. Inc.

Wong, A. T. (2018). A TAM Approach of Studying the Factors in Social Media and Consumer Purchase Intention in Hong Kong. *Journal of Economics, Management and Trade*, *21*(10), 1–17. https://doi.org/10.9734/jemt/2018/44080